(Revised 12-13-2010)

WILKERSON®

Pneumatic Products

Precision Regulators

Catalog 604

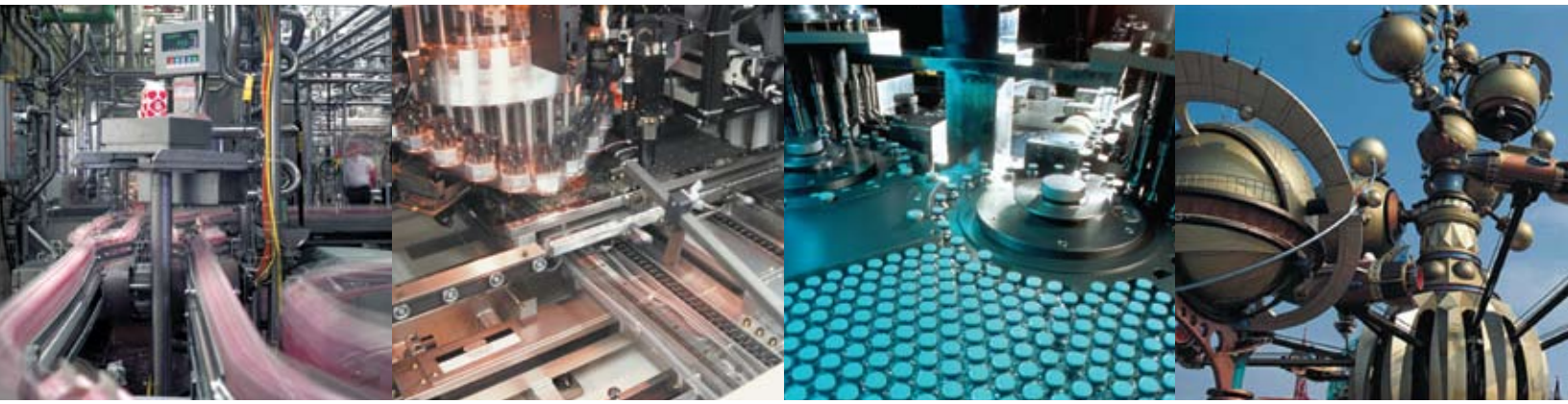

the total systems approach to air preparation

CAUTION:

REGULATOR PRESSURE ADJUSTMENT – The working range of knob adjustment is designed to permit outlet pressures within their full range. Pressure adjustment beyond this range is also possible because the knob is not a limiting device. This is a common characteristic of most industrial regulators, and limiting devices may be obtained only by special design.

For best performance, regulated pressure should always be set by increasing the pressure up to the desired setting.

⚠ WARNING

FAILURE OR IMPROPER SELECTION OR IMPROPER USE OF THE PRODUCTS AND/OR SYSTEMS DESCRIBED HEREIN OR RELATED ITEMS CAN CAUSE DEATH, PERSONAL INJURY AND PROPERTY DAMAGE.

This document and other information from The Company, its subsidiaries and authorized distributors provide product and/or system options for further investigation by users having technical expertise. It is important that you analyze all aspects of your application including consequences of any failure, and review the information concerning the product or system in the current product catalog. Due to the variety of operating conditions and applications for these products or systems, the user, through its own analysis and testing, is solely responsible for making the final selection of the products and systems and assuring that all performance, safety and warning requirements of the application are met.

The products described herein, including without limitation, product features, specifications, designs, availability and pricing, are subject to change by The Company and its subsidiaries at any time without notice.

Offer of Sale

The items described in this document are hereby offered for sale by The Company, its subsidiaries or its authorized distributors. This offer and its acceptance are governed by the provisions stated on the separate page of this document entitled “Offer of Sale”.

© Copyright 2009 Parker Hannifin Corporation. All Rights Reserved.

Table of Contents

Application Guide 2-3
WRA302 Compact High Precision Regulator 4-5
WRA102 Standard High Precision Regulator 6-7
WRA102BP High Precision Relief Valve 8-9
WRA171 High Precision Vacuum Regulator 10-11
WEA632 Precision Filter / Regulator 12-13
WBA208 Precision Pneumatic Input Signal Amplifier 14-15
WBA45 Precision Pneumatic Input Signal Amplifier 16-17
MPS32 Sensor 18-24
Safety Guide 26-27
Offer of Sale 28

Precision Regulators Application Guide

Pneumatic pressure regulators are designed to provide a constant pressure output from a fluctuating supply pressure – much the way an electronic voltage regulator works. Pressure regulators provide varying degrees of accuracy with regard to their reduced pressure output. General Purpose pressure regulators work for most fluid power applications. However, for more pressure-critical applications precision regulators can provide the customer with the control they need.

A partial listing of things that can potentially cause regulator output pressure variation are:

- Temperature changes
- Inlet pressure changes
- Variations in flow
- Excess downstream pressure
- Cycling
- Time
- Leakage

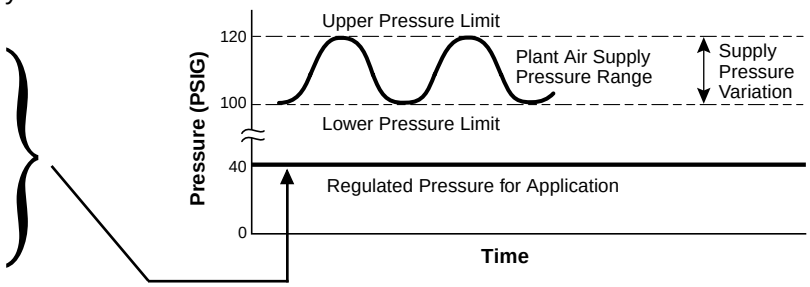

Who needs precision regulators?

Design level applications:
When designing a pneumatic system it is important to determine not only the air flow that the application will require but also the acceptable level of pressure variation. Some pneumatic applications cannot tolerate fluctuations in pressure. These applications can include static situations with only a steady pressure maintained, or dynamic flow situations involving any number of changing variables in play while trying to maintain a constant pressure.

Problem solving device for existing applications:
Sometimes an existing pneumatic application does not meet the customer's needs with regards to pressure control and/or stability. Any or all of the variables listed above can cause issues with pressure stability. As applications are expanded, added on to, or modified the pressure and flow requirements can change.

How do precision regulators differ from general purpose pneumatic regulators?

Examples-→	**High Precision Regulators** *WRA302, WRA102, WRA102BP, WRA171*	**Precision Regulators** *P12, P15 / P16, Dial Air*	**General Purpose Regulators** *R18, R28, R39, R30*
Sensitivity: *Reduced pressure repeatability/variation under no-flow condition*	.005 to .010 PSIG (1/8" to 1/4" of water column)	.5 to 1 PSIG	2 to 4 PSIG
Regulator's ability to control back pressure accurately: **key for cylinder applications*	Begins to relieve at .005 to .010 PSIG overpressure	Begins to relieve at .5 to 2 PSIG overpressure	Begins to relieve at 5 to 10 PSIG overpressure
Regulator's ability to maintain set pressure under varying flow, input pressure, temperature conditions:	High	Medium	Standard
Constant Bleed - does the regulator constantly bleed a small volume of air to the atmosphere to maintain stability?	Yes	No	No

1" Water Column = .0360 PSI
1PSI = 27.7612 Inches Water Column

Application Chart

Original Equipment Manufacturers (OEMs)

Air Gauging	Manufacturers of Air Gauging Equipment.
Anesthesia Equipment	Manufacturers
Calibration Stands	Similar to Test Stands
Clamping Pressure Control	End Effect Grippers, Roll Loading
Control Panels	Manufacturers and Users
Coordinate Measuring Machines	Manufacturers use in Force Counterbalance Applications in Z-axis
Dispensing Equipment	Adhesive, Paint, or any other form of Liquid or Gas
Food Process Machinery	Manufacturers
Gas Analyzers	Used for Reference and Calibration Air Pressures
Ink or Paint Robotics Spraying Systems	Manufacturers use to Maintain an Even Pressure on System
Leak Testing Equipment	Manufacturers of Equipment that Detects Leaks (i.e., Plastic Bottles)
Medical Equipment	Manufacturers that Utilize for Blood Processing and Sampling as Examples
Oxygen Ventilators	Manufacturers
Pharmaceutical Process Machinery	Pill or Tablet Making Machines
Phone Cable Pressurization Systems	Manufacturers
Polishing Machinery	Used to Maintain Even Pressure on Polishing Head
Semi-conductor Manufacturing Machinery	Manufacturers
Smoke Stack Analyzers	Used for Reference and Calibration Air Pressures
Soil or Environmental Analysis Equipment	Used for Reference and Calibration Air Pressures
Tank Blanketing	Maintain Pressure on Top Level of a Tank or Storage Vessel
Test Equipment	Similar to Test Stands
Test Stands	Manufacturers of Test Stands, Laboratory Test Stands, Engineering Test Stands, Production Test Stands
Tool Balancers	Manufacturers of Tool Balancers, Manipulators, and Articulating Arms use High Relief Capacity Precision Regulators in a Force-balancing Application. Used as part of a Pneumatic Counter-balance System, the Regulator helps suspend the tool in the air and then makes it easy to move out of the way when not in use.
Web Tensioning	Machinery Builders for Printing Presses, Paper Converting, Packaging, Textiles, Plastics. Primarily Unwind Stands and Rewind Stands.

System Integrators

Automation Integrators	Anyone Involved in Designs or Projects that Automate Processes

Energy Controls Systems

HVAC	Anyone who would be involved in Designs that would include Damper and Louvre Control for HVAC Applications

End Users

Instrumentation Supervisors	
Instrumentation Technicians	
Project Engineers	
Store Room Supervisors	

MRO

Chemical	
Petrochemical	
Pulp & Paper	
Food & Drug	
Refineries	
Power	
Mining	
Oil & Gas	

WRA302 Compact High Precision Regulator

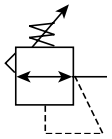

Features

- Control sensitivity of .250" (.63 cm) water column variation allows use in precision applications.
- A compensating diaphragm lets the regulator remain unaffected by supply pressure changes.
- Flow of up to 40 SCFM with 100 PSIG supply allows use in applications with high flow requirements.
- An aspirator tube compensates downstream pressure droop under flow conditions.
- A separate Control Chamber isolates the diaphragm from the main flow to eliminate hunting and buzzing.
- Unit construction lets you service the Regulator without removing it from the line.

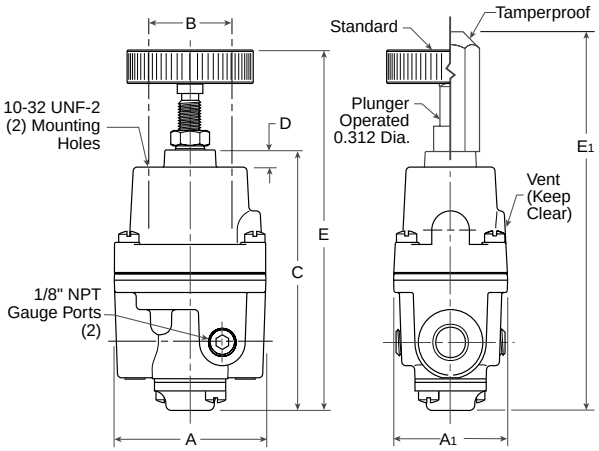

WRA302 Regulator Dimensions		
A 2.25 (57.3)	**A1** 1.70 (43.1)	**B** 1.25 (31.8)
C 3.81 (96.7)	**D** 0.25 (6.4)	**E** 5.22 (132.6)
E1 5.56 (141.1)		

Inches (mm)

The WRA302 Regulator is designed for applications that require high capacity and accurate process control in a small package. A poppet valve which is balanced by utilizing a convoluted diaphragm, insures a constant output pressure even during wide supply pressure variations. Stability of regulated pressure is maintained under varying flow conditions through the use of an aspirator tube which adjusts the air supply in accordance with the flow velocity.

⚠ WARNING

Product rupture can cause serious injury.
Do not connect regulator to bottled gas.
Do not exceed maximum primary pressure rating.

Ordering Information

WRA302	4	2	

Springs	
3	**0.5 to 30 PSIG**
4	**1 to 60 PSIG**
5	**2 to 100 PSIG**

Pipe Size
2 1/4" NPT

Options	
Blank	**No Options**
H	BSPP
N	Non-Relieving

Note: Other Spring Ranges, Port Sizes, and Options Available.
Please Consult Factory

BOLD ITEMS ARE MOST POPULAR.

Technical Information

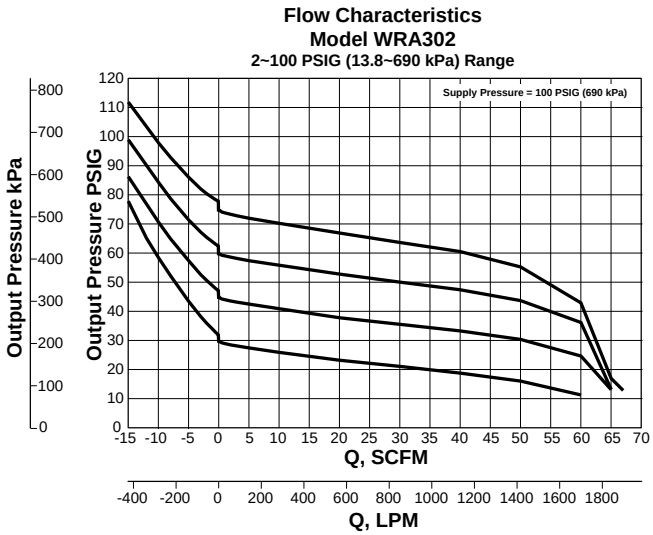

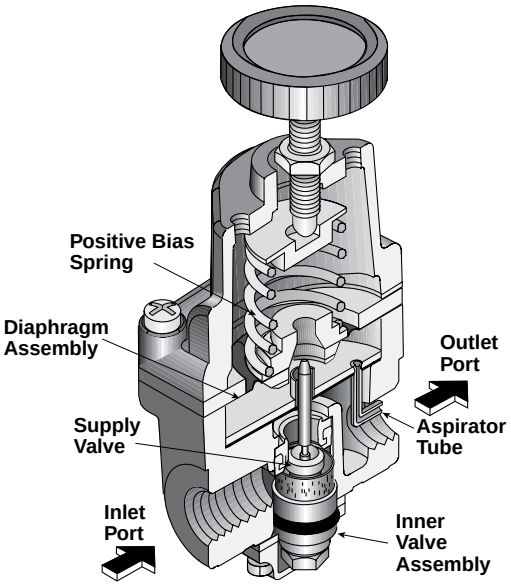

Operating Principles

The WRA302 Regulator uses the force balance principal to control the movement of the valve assembly which in turn controls the output pressure. When the regulator is adjusted for a specific set point, the downward force of the Positive Bias Spring causes the Diaphragm Assembly to move downward. The Supply Valve opens and allows air to pass to the Outlet Port. As the set point is reached, the downward force exerted by the Positive Bias spring is balanced by the upward force of the downstream pressure acting on the bottom of the Diaphragm Assembly. The resultant force moves the supply Valve upward to reduce the flow of air to the Outlet Port.
Outlet pressure is maintained as a result of balance between forces acting on the top and bottom of the Diaphragm Assembly.

WRA302 Kits and Accessories

Service Kits

1/2 to 30, 1 to 60, & 2 to 100 PSIG,
Nitrile, Standard..... PS16116-13

1/2 to 30, 1 to 60, & 2 to 100 PSIG,
Nitrile, Non-relieving PS16116-14

Tamper Resistant Kit..... PS12163

Mounting Bracket Kit PS417B

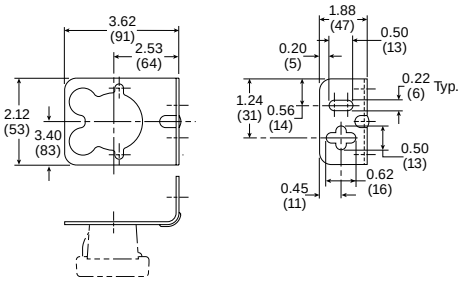

Specifications

Supply Pressure..... 250 PSIG, (17.0 bar), (1700 kPa) Maximum

Flow Capacity –
40 SCFM (68 m^3/HR) @ 100 PSIG, (7.0 bar), (700 kPa) Supply and 20 PSIG, (1.5 bar), (150 kPa) Setpoint

Exhaust Capacity –
2.0 SCFM (3.4 m^3/HR) where Downstream Pressure is 5 PSIG, (.35 bar), (35 kPa) above 20 PSIG, (1.5 bar), (150 kPa) Setpoint

Supply Pressure Effect –
Less than 0.2 PSIG, (.014 bar), (.14 kPa) for 100 PSIG, (7.0 bar), (700 kPa) change in Supply Pressure

Sensitivity..... .250" (.010 PSIG) (.64 cm) Water Column

Ambient Temperature .....-40°F to +200°F, (-40°C to 93°C)

Hazardous Locations –
Acceptable for use in Zones 1 and 2 for Gas Atmosphere: Groups IIA and IIB and Zones 21 and 22 for Dust Atmospheres

Materials of Construction

Body and Housing ..... Aluminum

Diaphragms..... Nitrile on Dacron

Trim..... Brass

WRA102 Standard High Precision Regulator

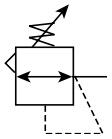

Features

- Control sensitivity of .125" (.32 cm) water column allows use in precision processes.
- Pressure balanced supply valve prevents supply pressure changes from affecting the setpoint.
- Optional check valve permits dumping of downstream pressure when supply is opened to atmosphere.
- Separate control chamber isolates the diaphragm from the main flow to eliminate hunting and buzzing.
- An aspirator tube compensates downstream pressure droop under flow conditions.

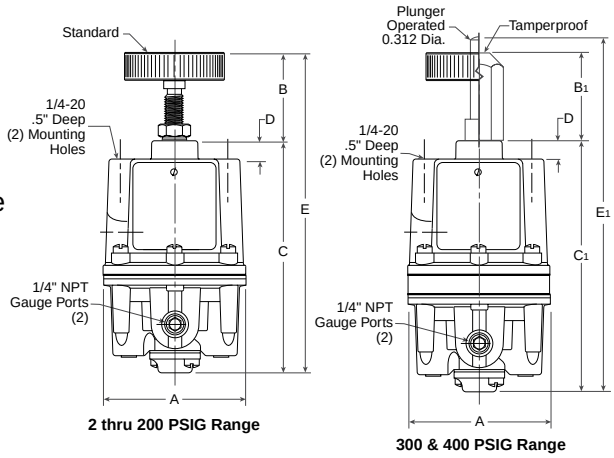

WRA102 Regulator Dimensions		
A 3.00 (76.2)	**B** 2.22 (56.5)	**B1** 2.13 (53.9)
C 4.42 (111.9)	**C1** 4.78 (121.6)	**D** 0.38 (9.4)
E 6.63 (168.5)	**E1** 7.28 (184.9)	

Inches (mm)

The WRA102 Regulator is designed for applications that require high capacity and accurate process control. A poppet valve which is balanced by utilizing a rolling diaphragm, insures a constant output pressure even during wide supply pressure variations. Stability of regulated pressure is maintained under varying flow conditions through the use of an aspirator tube which adjusts the air supply in accordance with the flow velocity.

⚠ WARNING

Product rupture can cause serious injury.
Do not connect regulator to bottled gas.
Do not exceed maximum primary pressure rating.

Ordering Information

WRA102	6	2	

Springs	
3	**0.5 to 30 PSIG**
4	**1 to 60 PSIG**
6	**2 to 150 PSIG**

Pipe Size
2 1/4" NPT

Options	
Blank	**No Options**
H	BSPP
N	Non-Relieving

Note: Other Spring Ranges, Port Sizes, and Options Available. Please Consult Factory

BOLD ITEMS ARE MOST POPULAR.

Technical Information

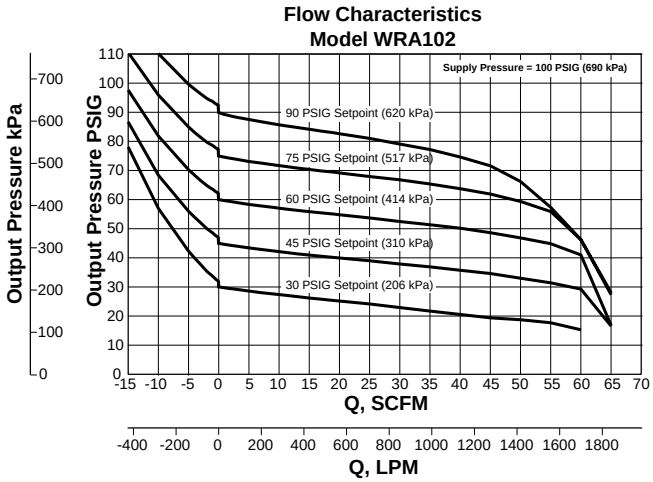

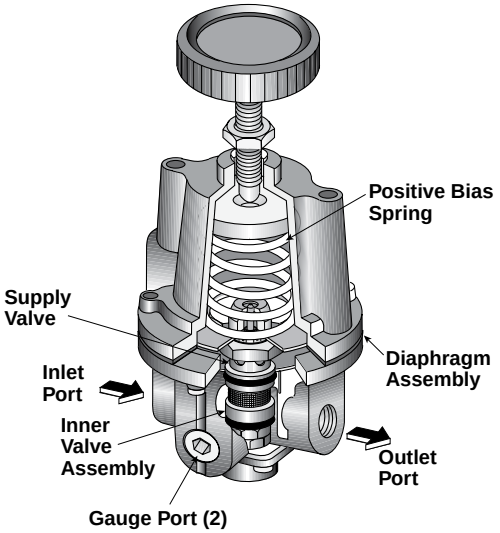

Operating Principles

The WRA102 Series regulator use the force balance principal to control the movement of the Valve Assembly that controls the output pressure. When the regulator is adjusted for a specific set point, the downward force of the Positive Bias Spring moves the Diaphragm Assembly downward. The Supply Valve opens and allows air to pass to the Outlet Port. As the set point is reached, the downward force exerted by the Positive Bias Spring is balanced by the force of the downstream pressure that acts on the Diaphragm Assembly. The resultant force moves the Supply Valve upward to reduce the flow of air to the Outlet Port.

Outlet pressure is maintained as a result of balance between forces acting on the top and bottom of the Diaphragm Assembly.

WRA102 Kits & Accessories

Mounting Bracket Kit –

Zinc Plated Steel PS09921

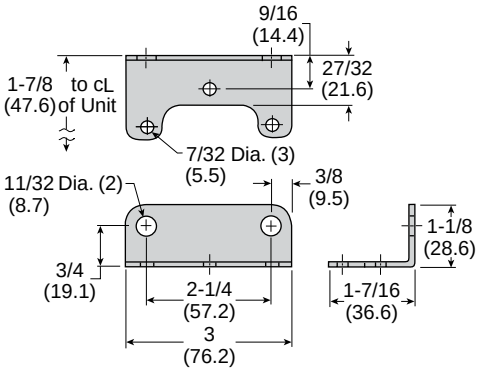

Service Kits

0 to 200 PSIG, Relieving..... PS12125-1
0 to 200 PSIG, Non--relieving PS12125-4

Tamper Resistant Kit..... PS12165

Specifications

Supply Pressure..... 500 PSIG, (35.0 bar), (3500 kPa) Maximum

Flow Capacity –
40 SCFM (68 m^3/HR) @ 100 PSIG, (7.0 bar), (700 kPa) Supply and 20 PSIG, (1.5 bar), (150 kPa) Setpoint

Exhaust Capacity –
5.5 SCFM (9.35 m^3/HR) where Downstream Pressure is 5 PSIG, (.35 bar), (35 kPa) above 20 PSIG, (1.5 bar), (150 kPa) Setpoint

Supply Pressure Effect –
Less than 0.1 PSIG, (.007 bar), (.7 kPa) for 100 PSIG, (7.0 bar), (700 kPa) change in Supply Pressure

Sensitivity..... .125" (.005 PSIG) (.32 cm) Water Column

Ambient Temperature .....-40°F to +200°F, (-40°C to 93°C)

Hazardous Locations –
Acceptable for use in Zones 1 and 2 for Gas Atmosphere: Groups IIA and IIB and Zones 21 and 22 for Dust Atmospheres

Materials of Construction

Body and Housing ..... Aluminum

Diaphragms..... Buna N on Dacron (Standard Unit Only)

Trim.....Brass, Zinc Plated Steel

WRA102BP High Precision Relief Valve

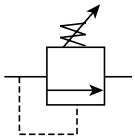

Features

- Control sensitivity of .125" (.32 cm) water column allows use in precision applications.
- A separate Control Chamber and Aspirator Tube isolate the diaphragm from the main flow to eliminate hunting and buzzing.
- Unit construction lets you service the WRA102BP without removing it from the line.
- Mounting Bracket is available.

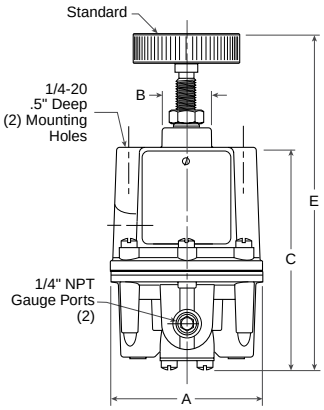

2 thru 200 PSIG Range

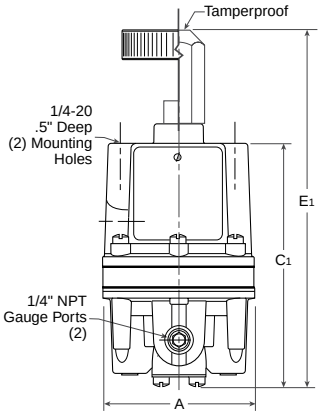

300 & 400 PSIG Range

PWRA102BP Regulator Dimensions		
A 3.00 (76.2)	**B** 0.97 (24.6)	**C** 4.19 (106.4)
C_1 4.56 (115.9)	**E** 6.31 (160.3)	**E_1** 6.75 (171.4)

Inches (mm)

The WRA102BP is a high capacity relief valve that relieves excess pressure in a pneumatic system.

The WRA102BP provides greater accuracy than standard relief valves over a narrow pressure range. The WRA102BP is an excellent choice for a wide range of precision applications.

⚠ WARNING

Product rupture can cause serious injury.
Do not connect regulator to bottled gas.
Do not exceed maximum primary pressure rating.

Ordering Information

WRA102	6	2	BP	

Springs
3 0.5 to 30 PSIG
4 1 to 60 PSIG
6 2 to 150 PSIG

Pipe Size
2 1/4" NPT

Options
BP Back Pressure

Options	
Blank	**No Options**
H	BSPP
N	Non-Relieving

Note: Other Spring Ranges, Port Sizes, and Options Available.
Please Consult Factory

BOLD ITEMS ARE MOST POPULAR.

Technical Information

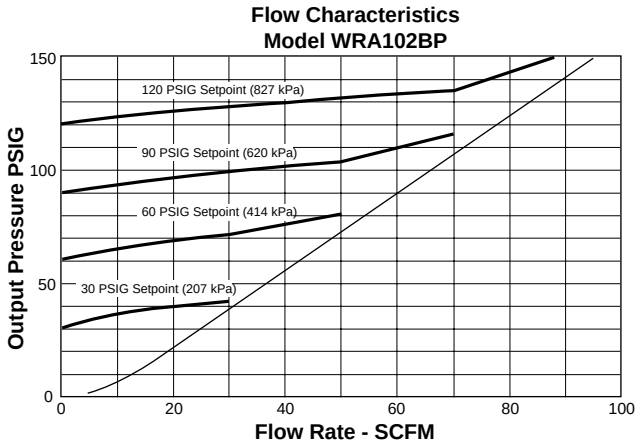

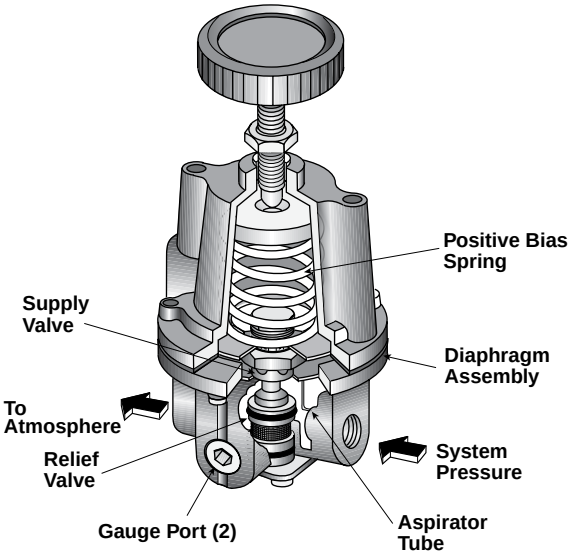

Operating Principles

The WRA102BP Regulator uses the force balance principle to open the Relief Valve and vent system pressure when the set point is exceeded.

Downstream pressure is transmitted through the Aspirator Tube to the bottom of the Diaphragm Assembly. When you adjust the range screw for a specific set point, the Positive Bias Spring compresses and exerts a force on the top of the Diaphragm Assembly. As long as the pressure acting on the bottom of the Diaphragm Assembly produces a force less than the spring force acting on the top of the Diaphragm Assembly, the Relief Valve remains closed. When system pressure increases, the force on the bottom of the Diaphragm Assembly increases until it reaches the set point. When system pressure increases beyond the set point, the assembly moves upward, lifting the Relief Valve from its seat and vents the downstream air.

If downstream pressure decreases below the set point, the assembly moves downward closing the Relief Valve.

WRA102BP Kits & Accessories

Mounting Bracket Kit –
Zinc Plated Steel PS09921

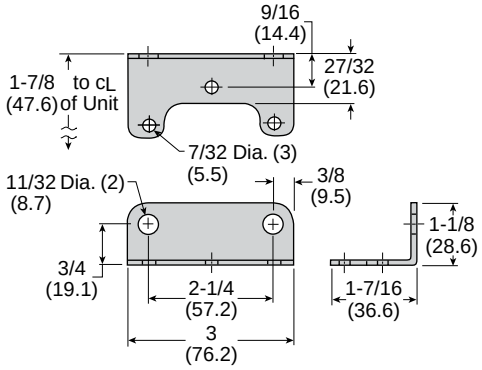

Service Kits
0 to 200 PSIG, Standard PS12127-1

Tamper Resistant Kit PS12165

Specifications

Set Point Range	System Pressure (Maximum)
2-200 PSIG (0.15-14 bar) (15-1400 kPa)	300 PSIG (21.0 bar) (2100 kPa)
300-400 PSIG (21-28 bar) (2100-2800 kPa)	500 PSIG (35.0 bar) (3500 kPa)

Flow Capacity (SCFM) –
40 (68 m^3/HR) @ 100 PSIG, (7.0 bar), (700 kPa) System Pressure

Sensitivity ..... .125" (.005 PSIG) (.32 cm) Water Column

Ambient Temperature ..... -40°F to +200°F, (-40°C to +93°C)

Materials of Construction

Body and Housing ..... Aluminum

Trim ..... Zinc Plated Steel, Brass

Nozzle ..... Nitrile on Dacron

WRA171 High Precision Vacuum Regulator

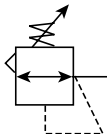

Features

- Control sensitivity of .125" (.32 cm) water column allows use in precision applications.
- Balanced supply valve minimizes effects of vacuum variation.
- Aspirator tube compensates for downstream pressure droop under flow conditions.
- Separate control chamber isolates the diaphragm from the main flow to eliminate hunting and buzzing.
- Construction allows servicing without removing from the line.

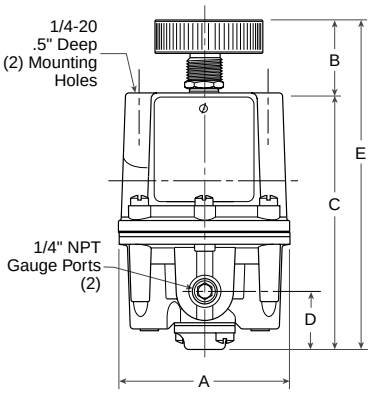

WRA171 Regulator Dimensions		
A 3.00 (76.2)	**B** 1.13 (28.7)	**C** 4.83 (122.6)
D 1.00 (25.4)	**E** 5.96 (151.3)	

Inches (mm)

The WRA171 is a high accuracy vacuum regulator that provides uniform vacuum regulation independent of vacuum supply changes and flow demand.

This unit has a diaphragm assembly with three springs to provide a more balanced loading of the diaphragm.

⚠ WARNING

Product rupture can cause serious injury.
Do not connect regulator to bottled gas.
Do not exceed maximum primary pressure rating.

Ordering Information

WRA171	3	2	N	N	K	N

Springs	Pipe Size	Thread Type	Options	Options	Options
3 0 to 30 Hg	**2 1/4" NPT**	**N NPT**	**N Nitrile**	**K Knob Assembly**	**N Non-Relieving**

Note: Other Spring Ranges, Port Sizes, and Options Available.
Please Consult Factory

BOLD ITEMS ARE MOST POPULAR.

Technical Information

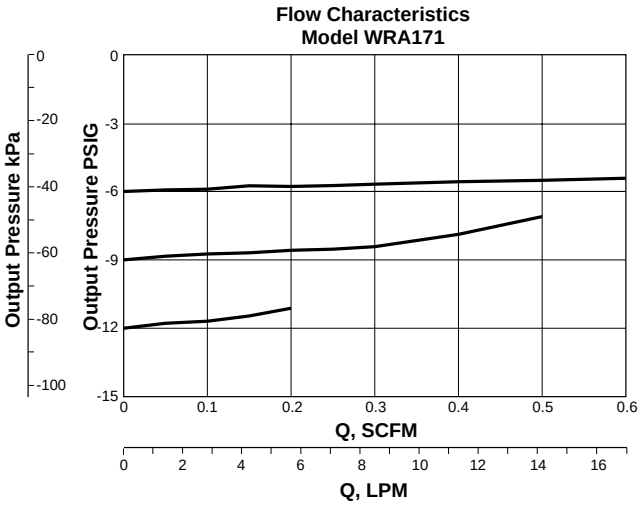

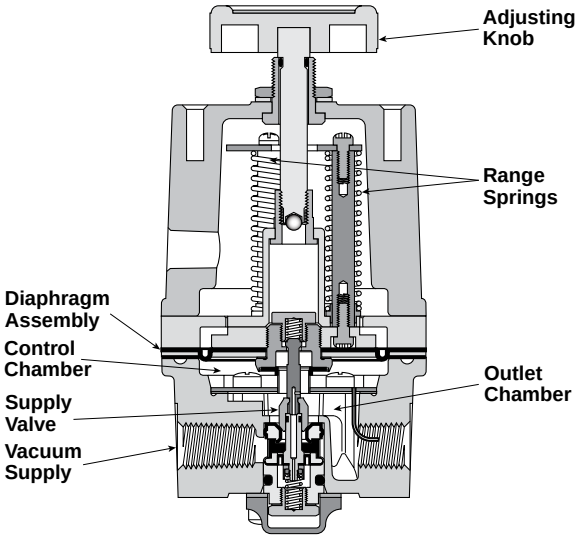

Operating Principles

The Model WRA171 Series vacuum regulator uses the force balance principle to control the movement of the Valve Assembly that controls output vacuum.

When the regulator is adjusted for a specific set point, the upward force of the Range Springs moves the Diaphragm Assembly upward. The Supply Valve opens and allows air to pass to the inlet port. As the set point is reached, the upward force exerted by the Range Springs is balanced by the force of the vacuum that pulls downward on the Diaphragm Assembly. The resultant force moves the Supply Valve downward to reduce the flow of air to the inlet port. Outlet vacuum is maintained as a result of balance between forces acting on the top and bottom of the Diaphragm Assembly.

WRA171 Kits and Accessories

Mounting Bracket PS09921

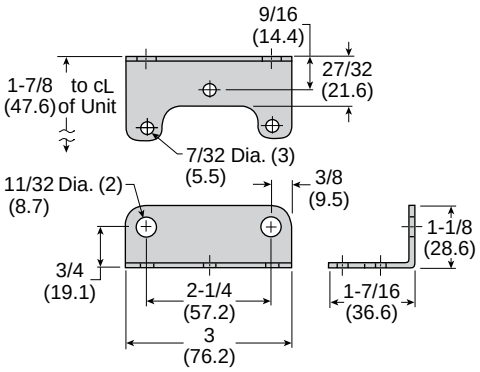

Service Kits

(Includes Diaphragm Assy, Valve Assy, Seat Assy & Gasket) –
0-30" Hg, Nitrile, Nonrelieving PS20966-9

Tamper Resistant Kit PS20967-1

Specifications

Vacuum Supply (Max) .....29.92 Hg (760 torr)

Flow Capacity .....3 SCFM @ 650 torr Sypply, 250 torr Setpoint

Sensitivity..... .125" (.005 PSIG) (.32 cm) Water Column

Ambient Temperature ..... -40°F to +200°F, (-40°C to +93°C)

Vacuum Supply Effect –
Less than 1 torr for 100 torr (.04 Hg for 3.94 Hg) Change in Vacuum Supply

Materials of Construction

Body and Housing..... Aluminum

Trim.....Zinc Plated Steel, Brass

Elastomers ..... Nitrile

W3EA632 Precision Filter / Regulator

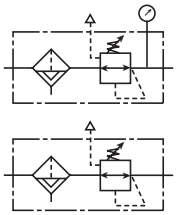

Features

- The no-brass construction is well suited to harsh environments.
- Internal and external epoxy finish for superior corrosion resistance.
- Non-bleed design to reduce consumption.
- Integral Relief Valve.
- A Gauge Port provides convenient pressure gauge mounting.
- The standard 5-micron filter minimizes internal contamination.
- The Filter Dripwell contains a Drain Plug to easily drain trapped liquids.
- Standard Tapped Exhaust.
- Soft Relief Seat minimizes air loss.

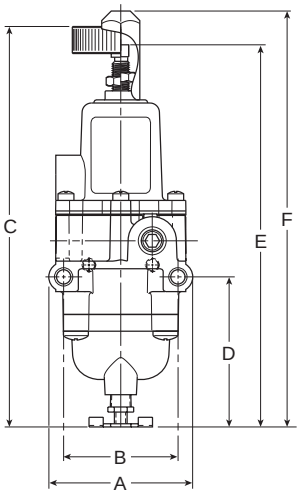

W3EA632 Regulator Dimensions		
A 2.83 (71.9)	**B** 2.25 (57.2)	**C** 7.88 (200)
D 2.96 (75)	**E** 7.52 (1916)	**F** 8.19 (209)

Inches (mm)

⚠ WARNING

Product rupture can cause serious injury.
Do not connect regulator to bottled gas.
Do not exceed maximum primary pressure rating.

Ordering Information

W3EA632	5	2	N	S	

Springs	Pipe Size	Thread Type	Adjustment	Options
4 1 to 60 PSIG **5 2 to 120 PSIG**	**2 1/4" NPT**	**N NPT** U BSPP	**S Screw (Std.)** K Knob T Tamperproof	**Blank None**

Note: Other Spring Ranges, Port Sizes, and Options Available.
Please Consult Factory

BOLD ITEMS ARE MOST POPULAR.

Technical Information

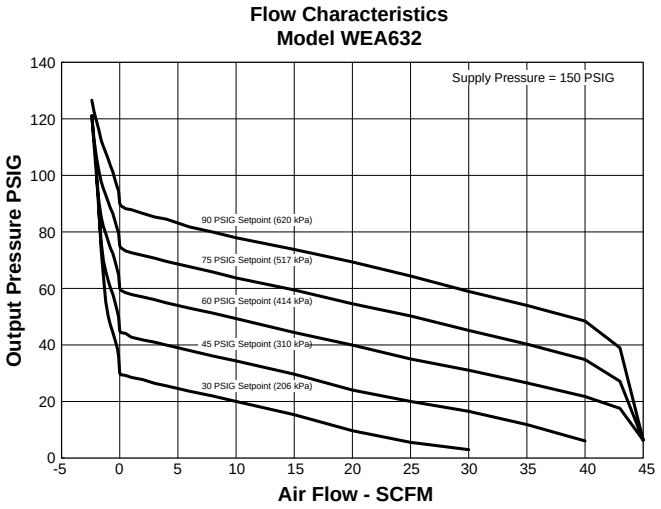

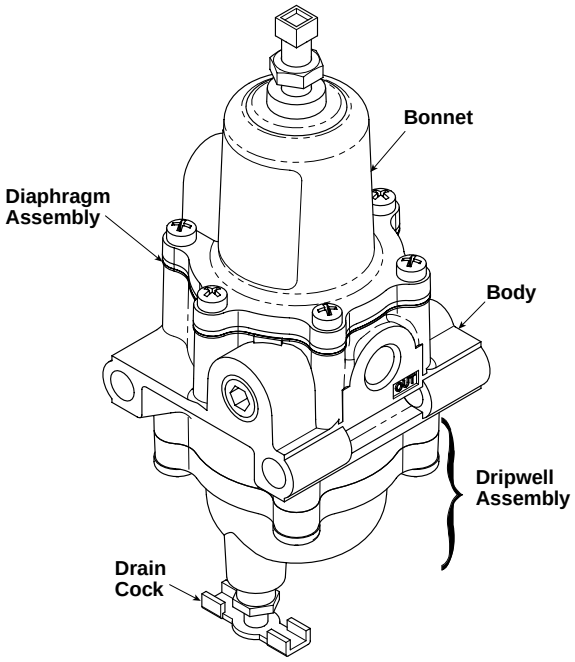

Operating Principles

When you turn the Adjustment Screw to a specific setpoint, the Spring exerts a downward force against the top of the Diaphragm Assembly. This downward force opens the Supply Valve. Output pressure flows through the Outlet Port and the passage to the Control Chamber where it creates an upward force on the bottom of the Diaphragm Assembly.

When the setpoint is reached, the force of the Spring that acts on the top of the Diaphragm Assembly balances with the force of output pressure that acts on the bottom of the Diaphragm Assembly and closes the Supply Valve.

When the output pressure increases above the setpoint, the Diaphragm Assembly moves upward to close the Supply Valve and open the Exhaust Valve. Output pressure flows through the Exhaust Valve and out of the Exhaust Vent on the side of the unit until it reaches the setpoint.

WEA632 Kits & Accessories

Service Kits
1 to 60, 2 to 120 PSIG PS19968-NR

Tamper Resistant Kit PS12165

Specifications

Supply Pressure ..... 250 PSIG, (17 bar), (1700 kPa) Maximum

Flow Capacity (SCFM) .....25 (42.5 m^3/HR) @ 100 psig, (7 bar), (700 kPa) supply and 20 PSIG, (1.5 bar), (150 kPa) setpoint

Exhaust Capacity (SCFM) .....0.8 (1.36 m^3/HR) where downstream pressure is 5 PSIG, (.35 bar), (35 kPa) above 20 PSIG, (1.5 bar), (150 kPa) setpoint. (0.8 SCFM for 120 # unit)

Maximum Supply Pressure ..... 250 PSIG, (14 bar), (1400 kPa)

Consumption .....Undetectable

Supply Pressure Effect ..... Less than 1.25 PSIG, (.09 bar), (9 kPa) change for 100 psig, (7.0 bar), (700 kPa) change in supply pressure (1.90 psig for 120 # unit)

Sensitivity.....1.0" (.036 PSIG) (2.54 cm) Water Column

Temperature Range..... -40° F to + 160° F, (-40° C to + 71° C)

Materials of Construction

Body and Housing.....Epoxy Coated Aluminum

Trim..... Stainless Steel, Nickel Plated Steel

Elastomers .....Nitrile

WBA208 Precision Pneumatic Input Signal Amplifier

Features

- The WBA208 uses a pneumatic input signal to accurately control output pressure based on a predetermined ratio.
- A balanced Supply Valve minimizes the effects of supply pressure variation.
- An Aspirator Tube compensates downstream pressure droop under flowing conditions.
- Optional Adjustable By-Pass Needle Valve allows tuning for optimum dynamic response (1:1 ratio only).
- Optional Fixed Negative Bias allows operation with pneumatic devices that cannot be adjusted to zero input pressure.
- A separate Control Chamber isolates the diaphragm from the main flow to eliminate hunting and buzzing.
- Unit construction allows servicing without removal.
- Mounting Bracket available.

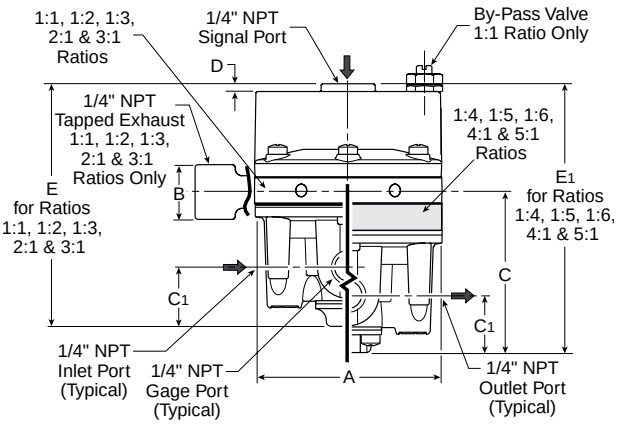

WBA208 Regulator Dimensions		
A 3.00 (76.2)	**B** .94 (23.8)	**C** 2.13 (53.9)
C_1 .94 (23.8)	**D** .13 (3.2)	**E** 3.88 (98.3)
E_1 4.31 (109.5)		

Inches (mm)

Ordering Information

WBA208	1	2	

Pilot Ratio
1 1:1
2 1:2
3 1:3

Pipe Size
2 1/4" NPT

Options	
Blank	**No Options**
E	Tapped Exhaust
H	BSPP
I	By-Pass Valve

Note: Other Spring Ranges, Port Sizes, and Options Available.
Please Consult Factory

BOLD ITEMS ARE MOST POPULAR.

Technical Information

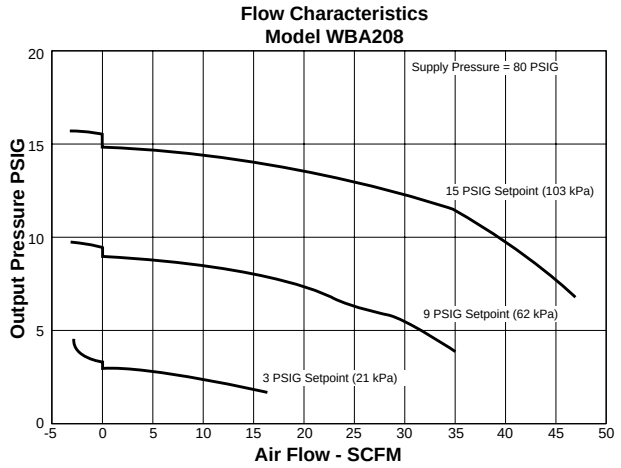

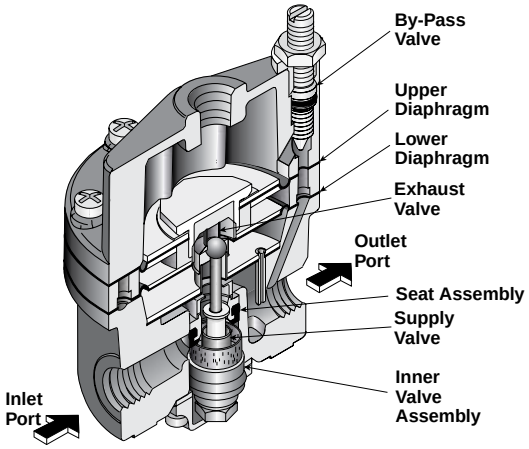

Materials of Construction

Body and Housing ..... Aluminum
Diaphragm..... Nitrile on Dacron Fabric
Trim.....Zinc Plated Steel, Brass

Operating Principles

The WBA208 Input Signal Amplifier is a pneumatic device capable of high flow and exhaust capacity. This device uses a force balance system to control the movement of the supply and exhaust valves.

At set point, the force due to signal pressure that acts on the top of the Upper Diaphragm balances with the force due to output pressure acting on the bottom of the Lower Diaphragm.

Specifications

	Signal:Output		
Ratio	**1:1**	**1:2**	**1:3**
Maximum Output Pressure, PSIG (bar)	150 (10.0)	150 (10.0)	150 (10.0)
Maximum Supply Pressure, PSIG (bar)	250 (17.0)	250 (17.0)	250 (17.0)
Flow Capacity SCFM, (m^3/HR) 100 PSIG, (7.0 bar) Supply, 20 PSIG, (1.5 bar) Output.	45 (76.5)	45 (76.5)	45 (76.5)
Exhaust Capacity SCFM, (m^3/HR) Downstream Pressure 5 PSIG, (.35 bar) Above Output Pressure Set Point of 20 PSIG, (1.5 bar).	11 (18.7)	11 (18.7)	11 (18.7)
Sensitivity (Water Column)	.250" (.64 cm)	.500" (1.27 cm)	.750" (1.9 cm)
Ratio Accuracy % of 100 PSIG, (7.0 bar) Output Span	1.0	1.0	1.0
% of Output Span with (7.0 bar) Input Span	—	—	—
Supply Pressure Effect, PSIG (bar) for change of 100 PSIG, (7.0 bar).	0.10 (.007)	0.20 (.014)	0.30 (.021)
Ambient Temperature, °F (°C)	-40 to +200 (-40 to +93)		

WBA208 Kits and Accessories

Mounting Bracket PS09921

Service Kits

1:1 Ratio PS19513-11
1:1 Ratio w/ By-Pass Valve.....PS19513-11I
1:2 Ratio PS19513-12
1:3 Ratio PS19513-13

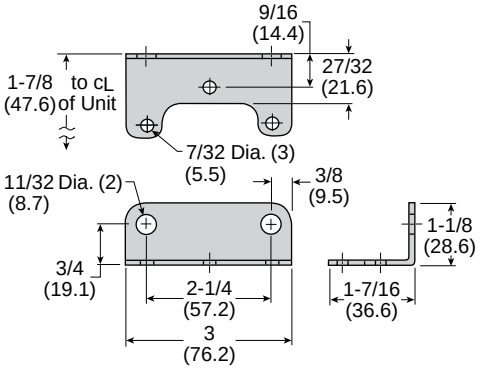

W3BA45 Precision Pneumatic Input Signal Amplifier

Features

- Five signal to output ratios meet most control element requirements.
- Control sensitivity of water column allows use in precision applications.
- Large Supply and Exhaust Valves provide high forward and exhaust flows.
- Soft Supply and Exhaust Valve seats minimize air consumption.
- A balanced Supply Valve minimizes the effect of supply pressure variation.
- An Aspirator Tube compensates downstream pressure droop under flow conditions.
- A separate Control Chamber isolates the diaphragm from the main flow to eliminate hunting and buzzing.
- Optional remote feedback port minimizes pressure drop at final control element under flow conditions.
- The optional adjustable By-pass Valve lets you tune for optimum dynamic response. (1:1 ratio only)
- Unit construction lets you service the W3BA45 without removing it from the line.

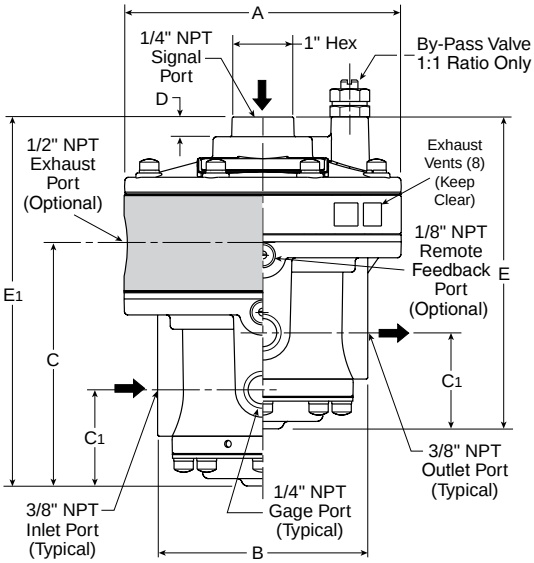

W3BA45 Regulator Dimensions		
A 4.50 (114.3)	**B** 3.41 (86.5)	**C** 3.86 (98)
C_1 1.56 (39.6)	**D** .31 (7.9)	**E** 5.07 (128.8)
E_1 5.83 (148.2)		

Inches (mm)

Ordering Information

W3BA45	1	4	A	

Pilot Ratio
1 1:1
2 1:2
3 1:3

Pipe Size
4 1/2" NPT
6 3/4" NPT

Type
A 45 Series

Options	
Blank	**No Options**
E	Tapped Exhaust
H	BSPP
I	By-Pass Valve

Note: Other Spring Ranges, Port Sizes, and Options Available. Please Consult Factory

BOLD ITEMS ARE MOST POPULAR.

Technical Information

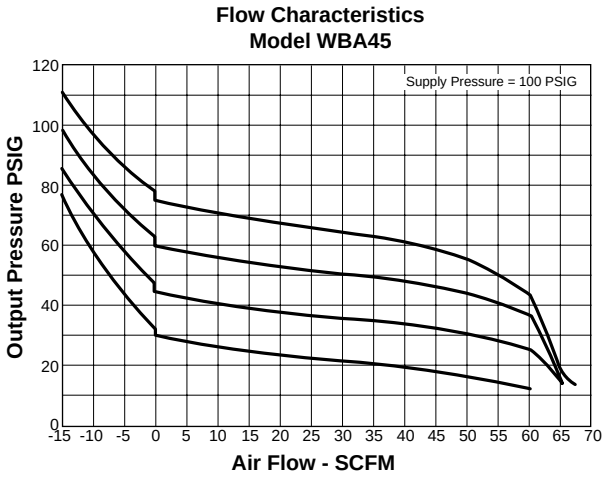

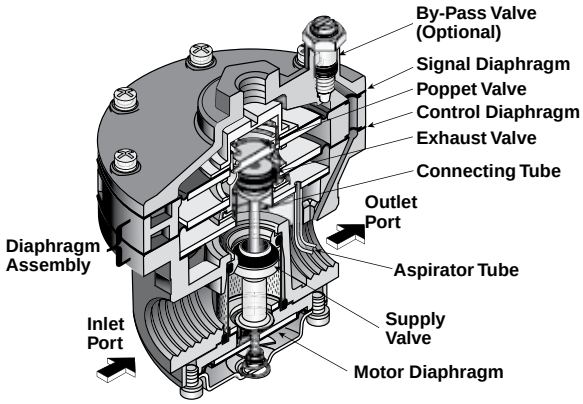

Operating Principles

When signal pressure on the top of the Signal Diaphragm creates a downward force on the Diaphragm Assembly, the Supply Valve opens. Output pressure flows through the Outlet Port and the Aspirator Tube to the Control Chamber to create an upward force on the bottom of the Control Diaphragm. When the setpoint is reached, the force of the signal pressure that acts on the top of the Signal Diaphragm balances with the force of the output pressure that acts on the bottom of the Control Diaphragm to close the Supply Valve.

When the output pressure increases above the signal pressure, the Diaphragm Assembly moves upward to close the Supply Valve and open the Exhaust Valve. Because the Poppet Valve is closed, pressure flows down the Connecting Tube to the bottom of the Motor Diaphragm. This pressure keeps the Supply Valve tightly closed while in the exhaust mode. The Poppet Valve opens and excess output pressure exhausts through the vent in the side of the unit until it reaches the setpoint.

Materials of Construction

Body and Housing ..... Aluminum
Diaphragm ..... Nitrile on Dacron Fabric
Trim ..... Zinc Plated Steel, Brass

Specifications

	Signal:Output		
Ratio	**1:1**	**1:2**	**1:3**
Maximum Output Pressure, PSIG (bar)	150 (10.0)	150 (10.0)	150 (10.0)
Maximum Supply Pressure, PSIG (bar)	250 (17.0)	250 (17.0)	250 (17.0)
Flow Capacity SCFM, (m^3/HR) 100 PSIG, (7.0 bar) Supply, 20 PSIG, (1.5 bar) Output	150 (255)	150 (255)	150 (255)
Exhaust Capacity SCFM, (m^3/HR) Downstream Pressure 5 PSIG, (.35 bar) Above 20 PSIG, (1.5 bar) Setpoint	40 (62.5)	40 (62.5)	40 (62.5)
Sensitivity (water column)	1.0" (2.54 cm)	2.0" (5.08 cm)	3.0" (7.62 cm)
Ratio Accuracy % of 100 PSIG, (7.0 bar) Output Span	3.0	3.0	3.0
% of Output Span with 100 PSIG (7.0 bar) Input Span	—	—	—
Supply Pressure Effect, PSIG (bar) for change of 100 PSIG, [7.0 bar], (700 kPa).	0.10 (.007)	0.20 (.014)	0.30 (.021)
Ambient Temperature, °F (°C)	-40 to +200 (-40 to +93)		
Hazardous Locations	Acceptable for use in Zones 1 and 2 for gas atmosphere; Groups IIA and IIB and Zones 21 and 22 for dust atmospheres.		

WBA45 Kits and Accessories

Service Kits

1:1 Ratio PS19549-1
1:1 Ratio w/ Tapped Exhaust PS19549-1E
1:3 Ratio PS19549-3
1:2 Ratio PS19549-2
1:1 w/ Tapped Exhaust, I Option PS19549-20E

MPS-32

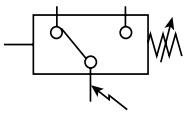

Red ⟷ Green Display

MPS-V32N-PC

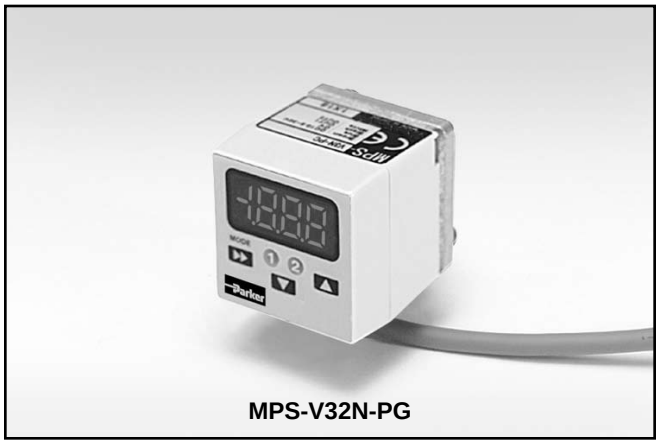

MPS-V32N-PG

Mounting Bracket MPS-ACCK1 Included with Sensors.

WRA171 with MPS-V32N-PG

Features

- Pressure Ranges:
  - Vacuum Pressure 0 to -30 inHg
  - Positive Pressure 0 to 145 PSI
- Sensor Output:
  - 2 NPN or PNP Open Collector Transistor Output, 30VDC, 125mA
  - Optional Analog Output, 4 to 20mA
  - Optional Analog Output, 1 to 5VDC
- Switch Point and Window Comparator Mode
- 4 Selectable Units of Measure
  - (mmHg, -bar, -kPa, inHg)
  - (kgf/cm^2, PSI, bar, kPa)
- Output Response Time Less Than 2.0 Milliseconds
- RoHS
- Air and Non-Corrosive Gases
- Error Message

MPS-32 Programming Options

Outputs Change N.O. / N.C.	✔
Units of Measure change	✔
EZY Mode	
Hysteresis Mode	✔
Window Comparator Mode	✔
Auto Teach Mode	✔
Auto Surveillance Mode	✔
Display Refresh Settings	✔
Output Response Time	✔
Display Peak / Bottom Difference Value	✔
Special Display Features	✔
Lockout Option	✔
Peak Value at a Touch	✔
Bottom Value at a Touch	✔
Zero Reset	✔
Red / Green LED Display Options	✔
Peak Surveillance Mode	✔
Energy Savings Mode	
Scan Mode	
Password Lockout	
Error Output Mode	
Setting of Decimal Point	

MPS-32 Ordering Numbers

Pressure Range	Port Size	Output Circuit	Electrical Connector	Part Number
0 to -30 inHg	1/8 NPSF*	PNP Sourcing	4 Pin, M8	**MPS-V32N-PC**
			2M Lead Wire	**MPS-V32N-PG**
		NPN Sinking	4 Pin, M8	MPS-V32N-NC
			2M Lead Wire	MPS-V32N-NG
0 to 145 PSI	1/8 NPSF*	PNP Sourcing	4 Pin, M8	**MPS-P32N-PC**
			2M Lead Wire	**MPS-P32N-PG**
		NPN Sinking	4 Pin, M8	MPS-P32N-NC
			2M Lead Wire	MPS-P32N-NG
		PNP Sourcing with 4-20ma	4 Pin, M8	**MPS-P32N-PCI**
		PNP Sourcing with 1-5VDC	4 Pin, M8	MPS-P32N-PCA

* Mounting Bracket Included

Specifications

Pressure Range		Vacuum (V)	Positive (P)
Units of Measure Display Resolution (with unit-switching function)		bar: 0.001 kPa: 0.1 mmHg: 1 inHg: 0.1	bar: 0.01 MPa: 0.001 kgf/cm²: 0.01 PSI: 1
Proof Pressure		-101 to 0 kPa	0 to 1 MPa
Media		Air & Non-Corrosive Gases	
Pressure Port		**(N)** 1/8" NPSF	
Operating Temperature		32 to 122°F (0 to 50°C)	
Storage Temperature		14 to 140°F (-10 to 60°C)	
Humidity		35 to 85% RH	
Electrical Connection		**(C)** 4-Pin, M8 Connector, **(G)** Grommet Open Lead	
Power Supply		12 to 24VDC ±10% or less, Ripple (Vp-p) 10% or less	
Display		3 + 1/2 Digit, 2 Color, 7-Segment LED	
Display Refresh		.1 to 3.0 Seconds, Variable (Factory set at 0.1)	
Control Output		NPN (Sinking), PNP (Sourcing), Open Collector, max 125mA, 2 Output	
Switch Output		Output Signal, NPN or PNP, Normally Open or Closed, LED Indicator	
Output Modes		Hysteresis or Window Comparator	
Response Time		2ms or less,(Variable 32, 128, 1024ms)	
Repeatability		± 0.2% of F.S. ± 1 digit or less	± 03% of F.S. ± 1 digit or less
Analog Output	Voltage Output	1 to 5VDC (1 ± 0.04V, 5 ± 0.04V); Outout Impedance 1kΩ; Linearity 0.5% of F.S.; Response Time 2ms or less	
	Current Output	4 to 20mA; Linearity ±0.5% of F.S. or less; Maximum Load Impedance 300Ω with Power Supply Voltage of 12V; 600Ω with Power Supply Voltage of 12V; Minimum Load Impedance 50Ω	
Thermal Error		32 to 122°F (0 to 50°C) 25°C (77°C) ± 2% of F.S. or less at range of 32 to 122°F (0 to 50°C)	
General Protection		IP50, CE Marked, EMC-EN61000-6-2: 2001	
Current Consumption		<80mA	
Vibration Resistance		10 to 150Hz, Double Amplitude 1.5mm, XYZ, 2 hrs.	
Shock Resistance		10G, XYZ	
Material		**Housing:** ABS (gray) , **Pressure Port:** Zinc Die-cast, **Diaphragm:** Silicone	
Mass		1.7 oz. (45g) (Not including cable)	

Sensor Pin Out

Pin #

1 Brown: 24VDC
2 White: NPN / PNP Open Collector Output 2
3 Blue: 0VDC
4 Black: NPN / PNP Open Collector Output 1

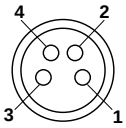

Lead Wiring

Sensor Pin Out with Analog Output

Current Output

Pin #

1 Brown: 24VDC
2 White: 4 to 20mA
3 Blue: 0VDC
4 Black: PNP Open Collector Output 1

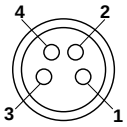

Voltage Output

Pin #

1 Brown: 24VDC
2 White: 1 to 5VDC
3 Blue: 0VDC
4 Black: PNP Open Collector Output 1

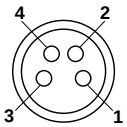

Internal Circuit for Open Collector and Analog Output Wiring

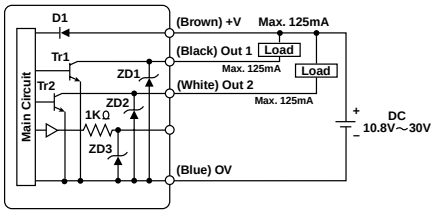

NPN **(2 Open Collector Output)**

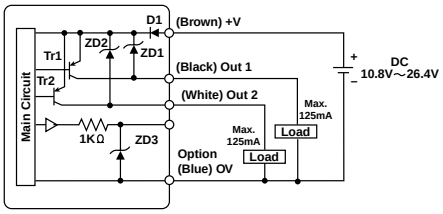

PNP **(2 Open Collector Output)**

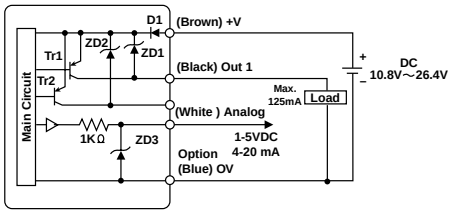

PNP **(with Analog Output)**

⚠ Cautions

The MPS-32 Pressure Sensor is designed to monitor pressure and is not a safety measure to prevent accidents.

The compatibility of the sensor is the responsibility of the designer of the system and specifications.

Operating Environment

- Parker Sensors have not been investigated for explosion-proof construction in hazardous environments.
- Do not use with flammable gases, liquids, or in hazardous environments.
- Avoid installing the sensor in locations where excessive voltage surges could damage or affect the performance of the sensor.

Operations

- Dedicate a power supply of 10.8 to 26.4VDC to the sensor and set the ripple to Vp-p10% or less. Avoid excessive voltage. Avoid voltage surges.
- A small amount of internal voltage drop is possible. Ensure the power supply minus any internal voltage drop exceeds the operating load.
- Verify the operating media is compatible with the specified sensor. Check the chemical make-up, operating temperatures, and maximum pressure ranges of the system before installing.
- Installation of air dryer system is recommended to remove moisture.

Installation

- Never insert an object into the pressure port other than an appropriate fluid connector.
- Avoid short-circuiting the sensor. Connect the brown lead to V+ and blue lead to 0V.
- Do not connect the output lead wires (black / white) to the power supply.
- Outputs not being used should be trimmed and insulated.
- Install as shown using the metal mounting bracket.

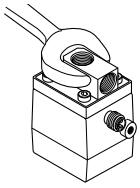

Error Messages

Display	Description	Solutions
Err	Zero Reset Error	Reset Zero Below 3% of F.S.
Er1	System Error (Internal)	Contact Factory
CE1	Over current of Output 1	Load current exceeds maximum 125mA.
FFF –FF	Applied pressure exceeds pressure range	Apply pressures within the rating of the sensor

Dimensions

N

1/8" Female

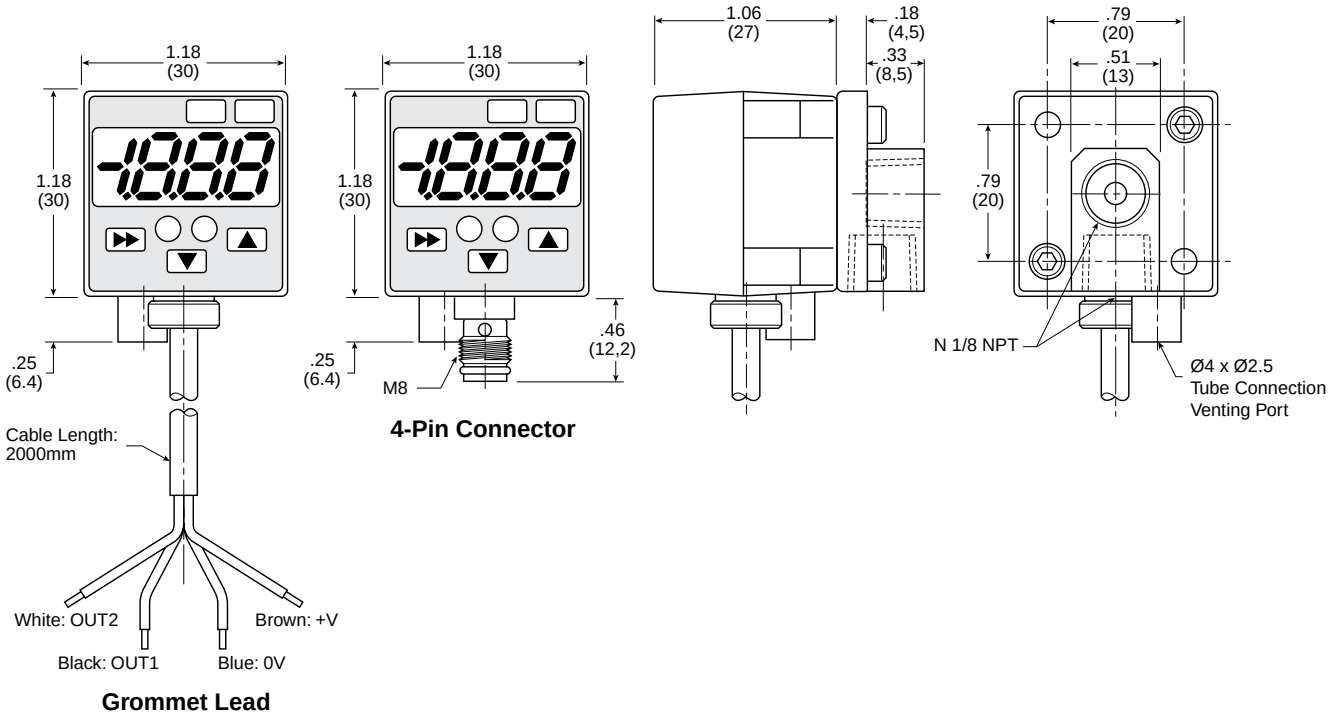

MPS-ACCK1

Mounting Brackets (Included)

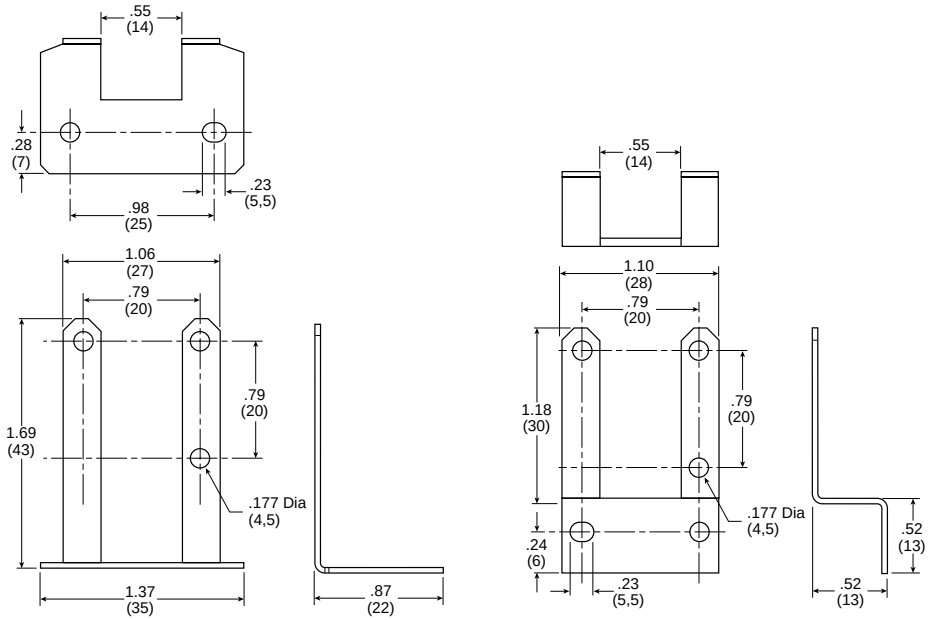

See page 38 for Symbol Explanation

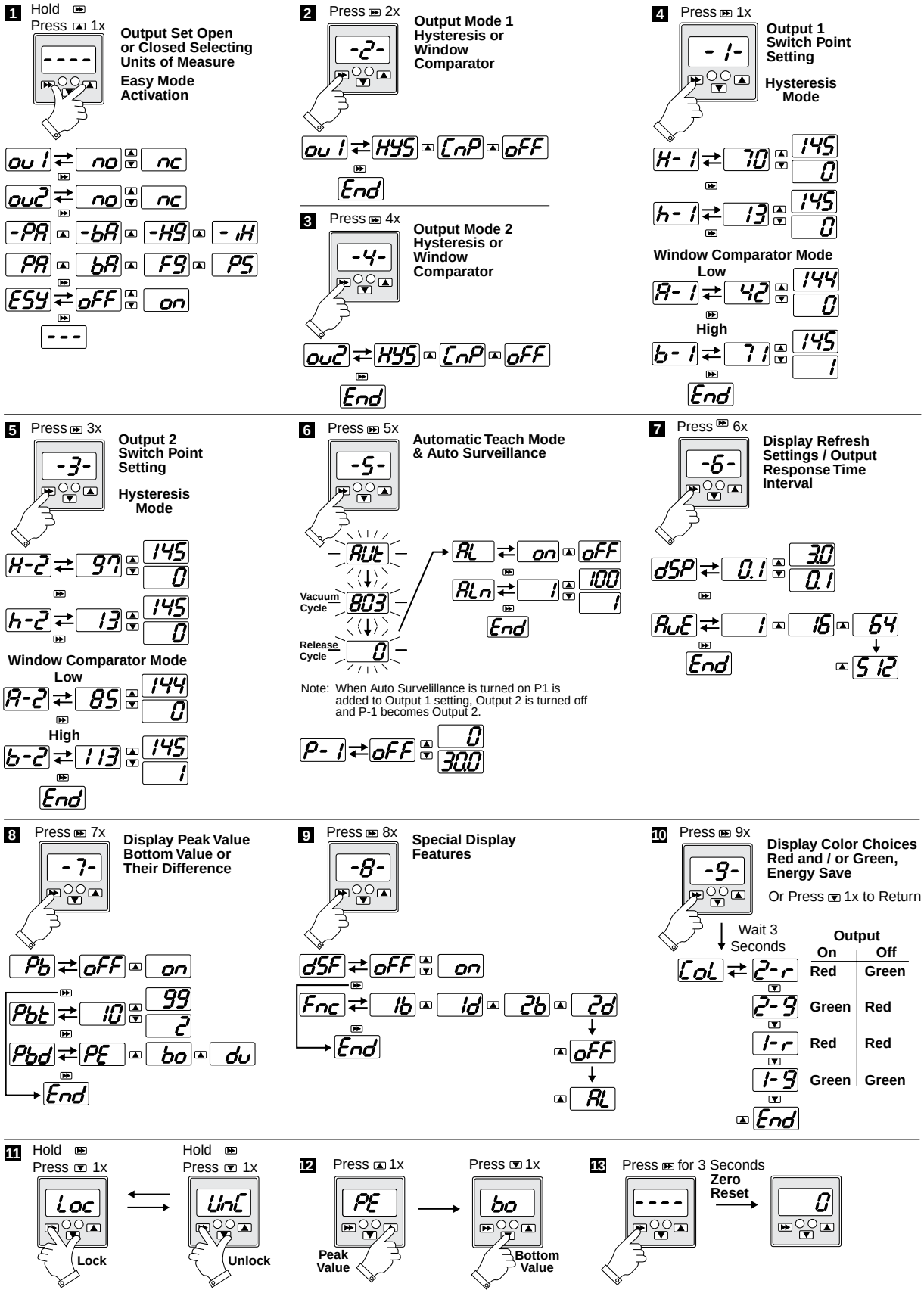

Accessories

Cables

CB-M8-4P-2M, Female to Open Lead

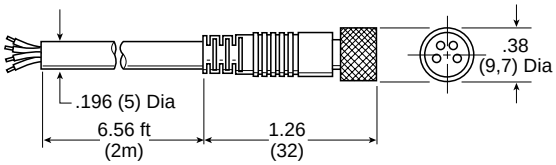

CB-M8-4P-5M, Female to Open Lead

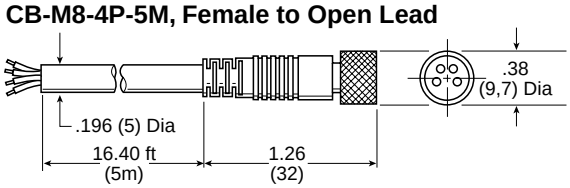

CB-M8-4P-M8-2M, M8 Female to M8 Male

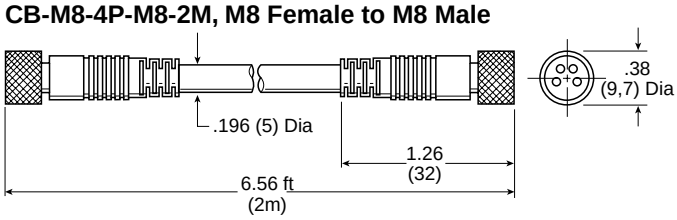

CB-M8-4P-5M-90, Female to Open Lead

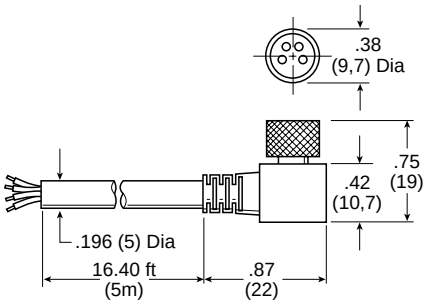

Pin Out Connection

Female Interface 4-Pin, M8	Male Interface 4-Pin, M8

Cable Pin	Color
1	Brown
2	White
3	Blue
4	Black

MPS-ACCH7
Panel Mounting Bracket

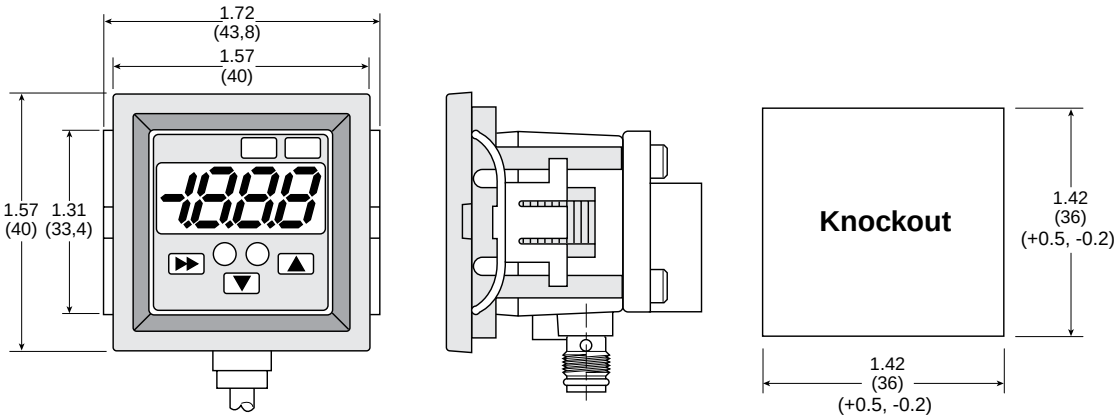

Programming Symbols Legend

MPS-32 2-Color Panel Mount

ou1		Output 1
ou2		Output 2
ou3		Output 3
ou4		Output 4
nc		Output Normally Closed (Passing)
no		Output Normally Open (Non-Passing)
-PA	PA	Pressure Units (Pascal). Negative Units for Vacuum Sensors
-bA	bA	Pressure Units (Bar). Negative Units for Vacuum Sensors
-H9	H9	Pressure Units (mm.Hg). Negative Units for Vacuum Sensors
-iH		Pressure Units (in.Hg). Negative Units for Vacuum Sensors
-F9	F9	Pressure Units (kgf/cm^2). Negative Units for Vacuum Sensors
PS		Pressure Units (PSI)
ESY		Easy Mode. Sensor will only allow changes to set points
oFF		Off, or Energy Saving Display; reduces current consumption of Sensor
on		On
HYS		Hysteresis Mode. Select Hysteresis Set Point and Hysteresis Range
CnP		Windows Comparative Mode Select High and Low Set Point
H-1		Hysteresis Mode Set Point. Output 1
H-2		Hysteresis Mode Set Point. Output 2
h-1		Hysteresis Mode. Hysteresis Range Output 1
h-2		Hysteresis Mode. Hysteresis Range Output 2
A-1		Windows Comparative Mode Low Set Point Output 1
b-1		Windows Comparative Mode High Set Point Output 1
A-2		Windows Comparative Mode Low Set Point Output 2
b-2		Windows Comparative Mode High Set Point Output 2
AUt		Automatic Teach Mode. Automatically sets Outputs 1 and 2 while cycling system. Output 1 set to Hysteresis Mode, Output 2 set to Window Comparative Mode
AL		Auto Surveillance Mode On/Off. Set after Automatic Teach
ALn		Auto Surveillance based on cycles times. Provides output if Peak Value is not obtained in a specified number of cycles. (1-100)
dSP		Display Refresh Setting. Display updates from .1 to 1 sec. .3 sec factory set. Does not affect Sensor Response Time
AuE		Output Response Time. Multiples the sensor response time. Increases sensor response time. (Anti-chatter Mode)
Pb		Pressure Value Display Mode. Displays Pressure for a specific time period and then updates for next time period
Pbt		Time Range for Pressure Value Display Mode
Pbd		Value Setting for Pressure Value Display Mode
PE		Display Peak Value over selected time range
bo		Display Bottom Value over selected time range
du		Display Difference over selected time range
dSF		Display Function Mode. On/Off
Fnc		Display Function. Selects display types.
1b		Display blinks pressure when Output 1 is Passing Normal when Output 1 is Non-Passing
2b		Display blinks pressure when Output 2 is Passing Normal when Output 2 is Non-Passing
1d		Display shows pressure when Output 1 is Passing Display shows special screen when Non-Passing
2d		Display shows pressure when Output 2 is Passing Display shows special screen when Non-Passing
SEt		Select Switch Output setting for MPS-31
CoL		Color Setting for MPS-31
Pot		MPS-4, Port Reference Selection
A		MPS-4, Display change of B port to A port static
b		MPS-4, Display change of A port to B port static
Ab		MPS-4, Display change of A port to change of B port
P1		MPS-7, Pressure Range Selection Vacuum
P2		MPS-7, Pressure Range Selection Low Pressure
P3		MPS-7, Pressure Range Selection Positive Pressure
P4		MPS-7, Pressure Range Selection Compound Pressure
SAuE		MPS-7, Energy Savings Mode, reduces current consumption
P-1		MPS-7, Peak Surveillance
oPt		Digital Input Sensors Only. Digital Input Mode for remote Zero reset of sensors
din		Digital Input
dch		Digital Channel
Scn		MPS-7 Scan Mode. Sensor scans and displays each channel for 3 sec.
Loc		Locked. Sensor programs cannot be changed
UnC		Unlocked. Sensor programs can be changed
Zero Reset		Sets Sensors reference point to current atmospheric conditions

Notes

Safety Guide For Selecting And Using Pneumatic Division Products And Related Accessories

⚠ WARNING:

FAILURE OR IMPROPER SELECTION OR IMPROPER USE OF PNEUMATIC DIVISION PRODUCTS, ASSEMBLIES OR RELATED ITEMS ("PRODUCTS") CAN CAUSE DEATH, PERSONAL INJURY, AND PROPERTY DAMAGE. POSSIBLE CONSEQUENCES OF FAILURE OR IMPROPER SELECTION OR IMPROPER USE OF THESE PRODUCTS INCLUDE BUT ARE NOT LIMITED TO:

- Unintended or mistimed cycling or motion of machine members or failure to cycle
- Work pieces or component parts being thrown off at high speeds.
- Failure of a device to function properly for example, failure to clamp or unclamp an associated item or device.
- Explosion
- Suddenly moving or falling objects.
- Release of toxic or otherwise injurious liquids or gasses.

Before selecting or using any of these Products, it is important that you read and follow the instructions below.

1. GENERAL INSTRUCTIONS

1.1. Scope: This safety guide is designed to cover general guidelines on the installation, use, and maintenance of Pneumatic Division Valves, FRLs (Filters pressure Regulators and Lubricators), Vacuum products and related accessory components.

1.2. Fail-Safe: Valves, FRLs, Vacuum products and their related components can and do fail without warning for many reasons. Design all systems and equipment in a fail-safe mode, so that failure of associated valves, FRLs or Vacuum products will not endanger persons or property.

1.3. Distribution: Provide a copy of this safety guide to each person that is responsible for selection, installation, or use of Valves, FRLs or Vacuum products. Do not select, or use Wilkerson valves, FRLs or vacuum products without thoroughly reading and understanding this safety guide as well as the specific Wilkerson publications for the products considered or selected.

1.4. User Responsibility: Due to the wide variety of operating conditions and applications for valves, FRLs, and vacuum products Wilkerson and its distributors do not represent or warrant that any particular valve, FRL or vacuum product is suitable for any specific end use system. This safety guide does not analyze all technical parameters that must be considered in selecting a product. The user, through its own analysis and testing, is solely responsible for:

- Making the final selection of the appropriate valve, FRL, Vacuum component, or accessory.
- Assuring that all user's performance, endurance, maintenance, safety, and warning requirements are met and that the application presents no health or safety hazards.
- Complying with all existing warning labels and / or providing all appropriate health and safety warnings on the equipment on which the valves, FRLs or Vacuum products are used; and,
- Assuring compliance with all applicable government and industry standards.

1.5. Safety Devices: Safety devices should not be removed, or defeated.

1.6. Warning Labels: Warning labels should not be removed, painted over or otherwise obscured.

1.7. Additional Questions: Call the appropriate Wilkerson technical service department if you have any questions or require any additional information. See the Wilkerson publication for the product being considered or used, or call 269-629-2550, or go to www.wilkersoncorp.com, for telephone numbers of the appropriate technical service department.

2. PRODUCT SELECTION INSTRUCTIONS

2.1. Flow Rate: The flow rate requirements of a system are frequently the primary consideration when designing any pneumatic system. System components need to be able to provide adequate flow and pressure for the desired application.

2.2. Pressure Rating: Never exceed the rated pressure of a product. Consult product labeling, Pneumatic Division catalogs or the instruction sheets supplied for maximum pressure ratings.

2.3. Temperature Rating: Never exceed the temperature rating of a product. Excessive heat can shorten the life expectancy of a product and result in complete product failure.

2.4. Environment: Many environmental conditions can affect the integrity and suitability of a product for a given application. Pneumatic Division products are designed for use in general purpose industrial applications. If these products are to be used in unusual circumstances such as direct sunlight and/or corrosive or caustic environments, such use can shorten the useful life and lead to premature failure of a product.

2.5. Lubrication and Compressor Carryover: Some modern synthetic oils can and will attack nitrile seals. If there is any possibility of synthetic oils or greases migrating into the pneumatic components check for compatibility with the seal materials used. Consult the factory or product literature for materials of construction.

2.6. Polycarbonate Bowls and Sight Glasses: To avoid potential polycarbonate bowl failures:

- Do not locate polycarbonate bowls or sight glasses in areas where they could be subject to direct sunlight, impact blow, or temperatures outside of the rated range.
- Do not expose or clean polycarbonate bowls with detergents, chlorinated hydro-carbons, keytones, esters or certain alcohols.
- Do not use polycarbonate bowls or sight glasses in air systems where compressors are lubricated with fire resistant fluids such as phosphate ester and di-ester lubricants.

2.7. Chemical Compatibility: For more information on plastic component chemical compatibility see Pneumatic Division technical bulletins Tec-3, Tec-4, and Tec-5

2.8. Product Rupture: Product rupture can cause death, serious personal injury, and property damage.
- Do not connect pressure regulators or other Pneumatic Division products to bottled gas cylinders.
- Do not exceed the maximum primary pressure rating of any pressure regulator or any system component.
- Consult product labeling or product literature for pressure rating limitations.

3. PRODUCT ASSEMBLY AND INSTALLATION INSTRUCTIONS

3.1. Component Inspection: Prior to assembly or installation a careful examination of the valves, FRLs or vacuum products must be performed. All components must be checked for correct style, size, and catalog number. DO NOT use any component that displays any signs of nonconformance.

3.2. Installation Instructions: Wilkerson published Installation Instructions must be followed for installation of Wilkerson valves, FRLs and vacuum components. These instructions are provided with every Wilkerson valve or FRL sold, or by calling 269-629-2550, or at www.wilkersoncorp.com.

3.3. Air Supply: The air supply or control medium supplied to Valves, FRLs and Vacuum components must be moisture-free if ambient temperature can drop below freezing

4. VALVE AND FRL MAINTENANCE AND REPLACEMENT INSTRUCTIONS

4.1. Maintenance: Even with proper selection and installation, valve, FRL and vacuum products service life may be significantly reduced without a continuing maintenance program. The severity of the application, risk potential from a component failure, and experience with any known failures in the application or in similar applications should determine the frequency of inspections and the servicing or replacement of Pneumatic Division products so that products are replaced before any failure occurs. A maintenance program must be established and followed by the user and, at minimum, must include instructions 4.2 through 4.10.

4.2. Installation and Service Instructions: Before attempting to service or replace any worn or damaged parts consult the appropriate Service Bulletin for the valve or FRL in question for the appropriate practices to service the unit in question. These Service and Installation Instructions are provided with every Wilkerson valve and FRL sold, or are available by calling 269-629-2550, or by accessing the Wilkerson web site at www.wilkersoncorp.com.

4.3. Lockout / Tagout Procedures: Be sure to follow all required lockout and tagout procedures when servicing equipment. For more information see: OSHA Standard – 29 CFR, Part 1910.147, Appendix A, The Control of Hazardous Energy – (Lockout / Tagout)

4.4. Visual Inspection: Any of the following conditions requires immediate system shut down and replacement of worn or damaged components:
- Air leakage: Look and listen to see if there are any signs of visual damage to any of the components in the system. Leakage is an indication of worn or damaged components.
- Damaged or degraded components: Look to see if there are any visible signs of wear or component degradation.
- Kinked, crushed, or damaged hoses. Kinked hoses can result in restricted air flow and lead to unpredictable system behavior.
- Any observed improper system or component function: Immediately shut down the system and correct malfunction.
- Excessive dirt build-up: Dirt and clutter can mask potentially hazardous situations.

Caution: Leak detection solutions should be rinsed off after use.

4.5. Routine Maintenance Issues:
- Remove excessive dirt, grime and clutter from work areas.
- Make sure all required guards and shields are in place.

4.6. Functional Test: Before initiating automatic operation, operate the system manually to make sure all required functions operate properly and safely.

4.7. Service or Replacement Intervals: It is the user's responsibility to establish appropriate service intervals. Valves, FRLs and vacuum products contain components that age, harden, wear, and otherwise deteriorate over time. Environmental conditions can significantly accelerate this process. Valves, FRLs and vacuum components need to be serviced or replaced on routine intervals. Service intervals need to be established based on:
- Previous performance experiences.
- Government and / or industrial standards.
- When failures could result in unacceptable down time, equipment damage or personal injury risk.

4.8. Servicing or Replacing of any Worn or Damaged Parts: To avoid unpredictable system behavior that can cause death, personal injury and property damage:
- Follow all government, state and local safety and servicing practices prior to service including but not limited to all OSHA Lockout Tagout procedures (OSHA Standard – 29 CFR, Part 1910.147, Appendix A, The Control of Hazardous Energy – Lockout / Tagout).
- Disconnect electrical supply (when necessary) before installation, servicing, or conversion.
- Disconnect air supply and depressurize all air lines connected to system and Pneumatic Division products before installation, service, or conversion.
- Installation, servicing, and / or conversion of these products must be performed by knowledgeable personnel who understand how pneumatic products are to be applied.
- After installation, servicing, or conversions air and electrical supplies (when necessary) should be connected and the product tested for proper function and leakage. If audible leakage is present, or if the product does not operate properly, do not put product or system into use.
- Warnings and specifications on the product should not be covered or painted over. If masking is not possible, contact your local representative for replacement labels.

4.9. Putting Serviced System Back into Operation: Follow the guidelines above and all relevant Installation and Maintenance instructions supplied with the valve FRL or vacuum component to insure proper function of the system.

Offer of Sale

The items described in this document and other documents and descriptions provided by The Company, its subsidiaries and its authorized distributors ("Seller") are hereby offered for sale at prices to be established by Seller. This offer and its acceptance by any customer ("Buyer") shall be governed by all of the following Terms and Conditions. Buyer's order for any item described in its document, when communicated to Seller verbally, or in writing, shall constitute acceptance of this offer. All goods or work described will be referred to as "Products".

1. Terms and Conditions. Seller's willingness to offer Products, or accept an order for Products, to or from Buyer is expressly conditioned on Buyer's assent to these Terms and Conditions and to the terms and conditions found on-line at www.parker.com/saleterms/. Seller objects to any contrary or additional term or condition of Buyer's order or any other document issued by Buyer.

2. Price Adjustments; Payments. Prices stated on the reverse side or preceding pages of this document are valid for 30 days. After 30 days, Seller may change prices to reflect any increase in its costs resulting from state, federal or local legislation, price increases from its suppliers, or any change in the rate, charge, or classification of any carrier. The prices stated on the reverse or preceding pages of this document do not include any sales, use, or other taxes unless so stated specifically. Unless otherwise specified by Seller, all prices are F.O.B. Seller's facility, and payment is due 30 days from the date of invoice. After 30 days, Buyer shall pay interest on any unpaid invoices at the rate of 1.5% per month or the maximum allowable rate under applicable law.

3. Delivery Dates; Title and Risk; Shipment. All delivery dates are approximate and Seller shall not be responsible for any damages resulting from any delay. Regardless of the manner of shipment, title to any products and risk of loss or damage shall pass to Buyer upon tender to the carrier at Seller's facility (i.e., when it's on the truck, it's yours). Unless otherwise stated, Seller may exercise its judgment in choosing the carrier and means of delivery. No deferment of shipment at Buyers' request beyond the respective dates indicated will be made except on terms that will indemnify, defend and hold Seller harmless against all loss and additional expense. Buyer shall be responsible for any additional shipping charges incurred by Seller due to Buyer's changes in shipping, product specifications or in accordance with Section 13, herein.

4. Warranty. Seller warrants that the Products sold hereunder shall be free from defects in material or workmanship for a period of twelve months from the date of delivery to Buyer or 2,000 hours of normal use, whichever occurs first. This warranty is made only to Buyer and does not extend to anyone to whom Products are sold after purchased from Seller. The prices charged for Seller's products are based upon the exclusive limited warranty stated above, and upon the following disclaimer: **DISCLAIMER OF WARRANTY: THIS WARRANTY COMPRISES THE SOLE AND ENTIRE WARRANTY PERTAINING TO PRODUCTS PROVIDED HEREUNDER. SELLER DISCLAIMS ALL OTHER WARRANTIES, EXPRESS AND IMPLIED, INCLUDING MERCHANTABILITY AND FITNESS FOR A PARTICULAR PURPOSE.**

5. Claims; Commencement of Actions. Buyer shall promptly inspect all Products upon delivery. No claims for shortages will be allowed unless reported to the Seller within 10 days of delivery. No other claims against Seller will be allowed unless asserted in writing within 60 days after delivery or, in the case of an alleged breach of warranty, within 30 days after the date within the warranty period on which the defect is or should have been discovered by Buyer. Any action based upon breach of this agreement or upon any other claim arising out of this sale (other than an action by Seller for any amount due to Seller from Buyer) must be commenced within thirteen months from the date of tender of delivery by Seller or, for a cause of action based upon an alleged breach of warranty, within thirteen months from the date within the warranty period on which the defect is or should have been discovered by Buyer.

6. LIMITATION OF LIABILITY. UPON NOTIFICATION, SELLER WILL, AT ITS OPTION, REPAIR OR REPLACE A DEFECTIVE PRODUCT, OR REFUND THE PURCHASE PRICE. **IN NO EVENT SHALL SELLER BE LIABLE TO BUYER FOR ANY SPECIAL, INDIRECT, INCIDENTAL OR CONSEQUENTIAL DAMAGES ARISING OUT OF, OR AS THE RESULT OF, THE SALE, DELIVERY, NON-DELIVERY, SERVICING, USE OR LOSS OF USE OF THE PRODUCTS OR ANY PART THEREOF, OR FOR ANY CHARGES OR EXPENSES OF ANY NATURE INCURRED WITHOUT SELLER'S WRITTEN CONSENT, EVEN IF SELLER HAS BEEN NEGLIGENT, WHETHER IN CONTRACT, TORT OR OTHER LEGAL THEORY. IN NO EVENT SHALL SELLER'S LIABILITY UNDER ANY CLAIM MADE BY BUYER EXCEED THE PURCHASE PRICE OF THE PRODUCTS.**

7. Contingencies. Seller shall not be liable for any default or delay in performance if caused by circumstances beyond the reasonable control of Seller.

8. User Responsibility. The user, through its own analysis and testing, is solely responsible for making the final selection of the system and Product and assuring that all performance, endurance, maintenance, safety and warning requirements of the application are met. The user must analyze all aspects of the application and follow applicable industry standards and Product information. If Seller provides Product or system options, the user is responsible for determining that such data and specifications are suitable and sufficient for all applications and reasonably foreseeable uses of the Products or systems.

9. Loss to Buyer's Property. Any designs, tools, patterns, materials, drawings, confidential information or equipment furnished by Buyer or any other items which become Buyer's property, may be considered obsolete and may be destroyed by Seller after two consecutive years have elapsed without Buyer placing an order for the items which are manufactured using such property. Seller shall not be responsible for any loss or damage to such property while it is in Seller's possession or control.

10. Special Tooling. A tooling charge may be imposed for any special tooling, including without limitation, dies, fixtures, molds and patterns, acquired to manufacture Products. Such special tooling shall be and remain Seller's property notwithstanding payment of any charges by Buyer. In no event will Buyer acquire any interest in apparatus belonging to Seller which is utilized in the manufacture of the Products, even if such apparatus has been specially converted or adapted for such manufacture and notwithstanding any charges paid by Buyer. Unless otherwise agreed, Seller shall have the right to alter, discard or otherwise dispose of any special tooling or other property in its sole discretion at any time.

11. Buyer's Obligation; Rights of Seller. To secure payment of all sums due or otherwise, Seller shall retain a security interest in the goods delivered and this agreement shall be deemed a Security Agreement under the Uniform Commercial Code. Buyer authorizes Seller as its attorney to execute and file on Buyer's behalf all documents Seller deems necessary to perfect its security interest. Seller shall have a security interest in, and lien upon, any property of Buyer in Seller's possession as security for the payment of any amounts owed to Seller by Buyer.

12. Improper use and Indemnity. Buyer shall indemnify, defend, and hold Seller harmless from any claim, liability, damages, lawsuits, and costs (including attorney fees), whether for personal injury, property damage, patent, trademark or copyright infringement or any other claim, brought by or incurred by Buyer, Buyer's employees, or any other person, arising out of: (a) improper selection, improper application or other misuse of Products purchased by Buyer from Seller; (b) any act or omission, negligent or otherwise, of Buyer; (c) Seller's use of patterns, plans, drawings, or specifications furnished by Buyer to manufacture Product; or (d) Buyer's failure to comply with these terms and conditions. Seller shall not indemnify Buyer under any circumstance except as otherwise provided.

13. Cancellations and Changes. Orders shall not be subject to cancellation or change by Buyer for any reason, except with Seller's written consent and upon terms that will indemnify, defend and hold Seller harmless against all direct, incidental and consequential loss or damage. Seller may change product features, specifications, designs and availability with notice to Buyer.

14. Limitation on Assignment. Buyer may not assign its rights or obligations under this agreement without the prior written consent of Seller.

15. Entire Agreement. This agreement contains the entire agreement between the Buyer and Seller and constitutes the final, complete and exclusive expression of the terms of the agreement. All prior or contemporaneous written or oral agreements or negotiations with respect to the subject matter are herein merged.

16. Waiver and Severability. Failure to enforce any provision of this agreement will not waive that provision nor will any such failure prejudice Seller's right to enforce that provision in the future. Invalidation of any provision of this agreement by legislation or other rule of law shall not invalidate any other provision herein. The remaining provisions of this agreement will remain in full force and effect.

17. Termination. This agreement may be terminated by Seller for any reason and at any time by giving Buyer thirty (30) days written notice of termination. In addition, Seller may by written notice immediately terminate this agreement for the following: (a) Buyer commits a breach of any provision of this agreement (b) the appointment of a trustee, receiver or custodian for all or any part of Buyer's property (b) the filing of a petition for relief in bankruptcy of the other Party on its own behalf, or by a third party (c) an assignment for the benefit of creditors, or (d) the dissolution or liquidation of the Buyer.

18. Governing Law. This agreement and the sale and delivery of all Products hereunder shall be deemed to have taken place in and shall be governed and construed in accordance with the laws of the State of Ohio, as applicable to contracts executed and wholly performed therein and without regard to conflicts of laws principles. Buyer irrevocably agrees and consents to the exclusive jurisdiction and venue of the courts of Cuyahoga County, Ohio with respect to any dispute, controversy or claim arising out of or relating to this agreement. Disputes between the parties shall not be settled by arbitration unless, after a dispute has arisen, both parties expressly agree in writing to arbitrate the dispute.

19. Indemnity for Infringement of Intellectual Property Rights. Seller shall have no liability for infringement of any patents, trademarks, copyrights, trade dress, trade secrets or similar rights except as provided in this Section. Seller will defend and indemnify Buyer against allegations of infringement of U.S. patents, U.S. trademarks, copyrights, trade dress and trade secrets ("Intellectual Property Rights"). Seller will defend at its expense and will pay the cost of any settlement or damages awarded in an action brought against Buyer based on an allegation that a Product sold pursuant to this Agreement infringes the Intellectual Property Rights of a third party. Seller's obligation to defend and indemnify Buyer is contingent on Buyer notifying Seller within ten (10) days after Buyer becomes aware of such allegations of infringement, and Seller having sole control over the defense of any allegations or actions including all negotiations for settlement or compromise. If a Product is subject to a claim that it infringes the Intellectual Property Rights of a third party, Seller may, at its sole expense and option, procure for Buyer the right to continue using the Product, replace or modify the Product so as to make it noninfringing, or offer to accept return of the Product and return the purchase price less a reasonable allowance for depreciation. Notwithstanding the foregoing, Seller shall have no liability for claims of infringement based on information provided by Buyer, or directed to Products delivered hereunder for which the designs are specified in whole or part by Buyer, or infringements resulting from the modification, combination or use in a system of any Product sold hereunder. The foregoing provisions of this Section shall constitute Seller's sole and exclusive liability and Buyer's sole and exclusive remedy for infringement of Intellectual Property Rights.

20. Taxes. Unless otherwise indicated, all prices and charges are exclusive of excise, sales, use, property, occupational or like taxes which may be imposed by any taxing authority upon the manufacture, sale or delivery of Products.

21. Equal Opportunity Clause. For the performance of government contracts and where dollar value of the Products exceed $10,000, the equal employment opportunity clauses in Executive Order 11246, VEVRAA, and 41 C.F.R. §§ 60-1.4(a), 60-741.5(a), and 60-250.4, are hereby incorporated.

WILKERSON®

Pneumatic Division
8676 E. M89
P.O. Box 901
Richland, MI 49083 USA

Applications Engineering

Phone: 888 223 5126 Option #2
E-mail: pdnapps@parker.com

Customer Support

Phone: 888 223 5126 Option #1
E-mail: wilkerson_sales@parker.com

Catalog 604 02/09 5M IGS Printed in U.S.A.